D-30819

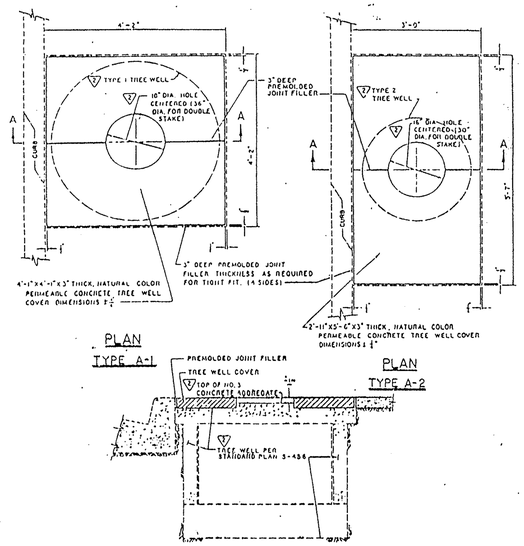

BUREAU OF ENGINEERING	DEPARTMENT OF PUBLIC WORKS	CITY OF LOS ANGELES
TREE WELL COVER-TYPE A		STANDARD PLAN S-450-2

NOTES

1. THE COVER SHALL BE MADE OF PERMEABLE CONCRETE WITH A MINIMUM COMPRESSIVE STRENGTH OF 1700 PSI AND SHALL BE CAST-IN-PLACE OR PRECAST "GRASPERM" OR EQUIVALENT. CAST-IN-PLACE CONCRETE SHALL CONSIST OF ONE PART CEMENT TO FOUR PARTS 3/4" GRAVEL AND APPROXIMATELY FOUR GALLONS OF WATER PER SACK OF CEMENT. THE GRAVEL SHALL BE CLEAN WITH FINES REMOVED. THE CONCRETE MIXTURE SHALL BE DEPOSITED AS NEAR AS POSSIBLE TO ITS FINAL LOCATION. THE EXCESS CONCRETE SHALL BE ADDED OFF IN A SAWING MOTION. A SUPPLY OF CONCRETE SHALL BE MAINTAINED AGAINST THE FRONT SURFACE OF THE SCREED IN ORDER THAT LOW AREAS WILL BE FILLED AS THE SCREED PASSES OVER. RODDING SHALL BE HELD TO A MINIMUM. AFTER THE SURFACE IS FLAT NO OTHER FINISHING WILL BE REQUIRED. CURING COMPOUND TO WHICH WATER PROOFING MATERIALS HAVE BEEN ADDED SHALL NOT BE PERMITTED.
2. EXISTING SIDEWALK SHALL BE SAWCUT PREPARATORY TO INSTALLATION OF TREE WELL COVERS. SAWCUT OVER-RUNS SHALL BE CLEANED AND FILLED WITH RAPID SET EPOXY ADHESIVE PER CALTRANS STANDARD SPECIFICATION SUBSECTION 95-2.04 AND FINISHED TO SIDEWALK GRADE.
3. AFTER ALL WORK PERTINENT TO PLANTING HAS BEEN COMPLETED, INSTALL THE TREE WELL COVER.

STANDARD PLAN NO. S-450-2	VAULT INDEX NUMBER B-4034	SHEET 2 OF 2 SHEETS

PALM TREE PLANTING GUIDELINES

Brown trunk height above ground level	Original root ball grade to be set below grade at planting
10 to 15 foot	one foot depth
16 to 20 foot	two foot depth
21 to 25 foot	three foot depth
26 to 30 foot	four foot depth
31 to 35 foot	five foot depth
36 to 45 foot	seven to eight foot depth
46 foot and above	ten foot depth

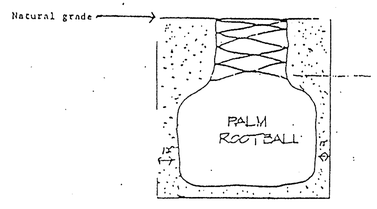

Hole for tree to be planted in must be 12 inches larger than the diameter of t root ball. Hole must be backfilled with washed plaster sand.

Robert W. Kennedy

Robert W. Kennedy, Superintendent II
Street Tree Division

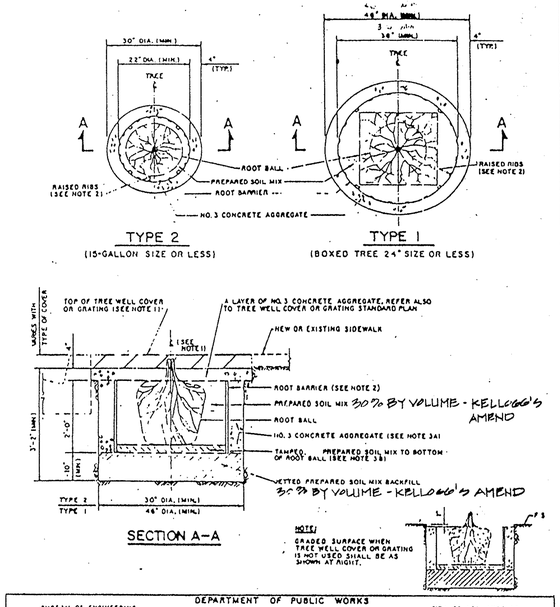

NOTE:
GRADED SURFACE WHEN TREE WELL COVER OR GRATING IS NOT USED SHALL BE AS SHOWN AT RIGHT.

BUREAU OF ENGINEERING	DEPARTMENT OF PUBLIC WORKS	CITY OF LOS ANGELES
TREE WELL, ROOT BARRIER AND PLANTING		STANDARD PLAN S-456-1

NOTES

1. SEE PROJECT PLANS FOR TYPE OF TREE WELL COVER OR TREE GUARD AND GRATING; IF REQUIRED.
2. ROOT BARRIER SHALL BE FABRICATED FROM A HIGH DENSITY AND HIGH IMPACT PLASTIC SUCH AS POLYVINYL CHLORIDE, ABS OR POLYETHYLENE AND HAVE A MINIMUM THICKNESS OF 0.06 INCH. THE PLASTIC SHALL HAVE 1/2-INCH HIGH RAISED VERTICAL RIBS ON THE INNER SURFACE SPACED NOT MORE THAN 8 INCHES APART.
3. PLANTING SHALL CONFORM TO SUBSECTION 308-4 OF THE STANDARD SPECIFICATIONS, EXCEPT THAT:
   A. THE LOWER 10 INCHES OF THE EXCAVATION SHALL BE BACKFILLED WITH PREPARED SOIL MIX AND JETTED PRIOR TO PLACING THE ROOT BARRIER AND THE NO.3 CONCRETE AGGREGATE (SUBSECTION 200-1.4, STANDARD SPECIFICATIONS).
   B. PREPARED SOIL MIX SHALL BE PLACED IN THE PLANTING HOLE AND TAMPED TO BOTTOM OF ROOT BALL ELEVATION PRIOR TO PROCEEDING WITH TREE PLANTING.
4. AFTER PLANTING, EACH TREE SHALL BE WATERED IMMEDIATELY WITH A MINIMUM OF 20 GALLONS OF WATER. REPEAT THE WATERING TWICE IN THE NEXT 3 DAYS NOT SOONER THAN AT 24-HOUR INTERVALS.
5. AFTER THE TREE HAS BEEN WATERED FOR 3 DAYS, ALLOW THE SOIL TO DRY SUFFICIENTLY, THEN TAMP AND GRADE THE SOIL. PLACE AND GRADE THE LAYER OF CONCRETE AGGREGATE IN ORDER TO SET THE TREE WELL COVER OR GRATING FINALLY AND FLUSH WITH THE TOP SURFACE OF THE SIDEWALK OR CURB.

STANDARD PLAN NO. S-456-1	VAULT INDEX NUMBER B-4118	SHEET 2 OF 2 SHEETS

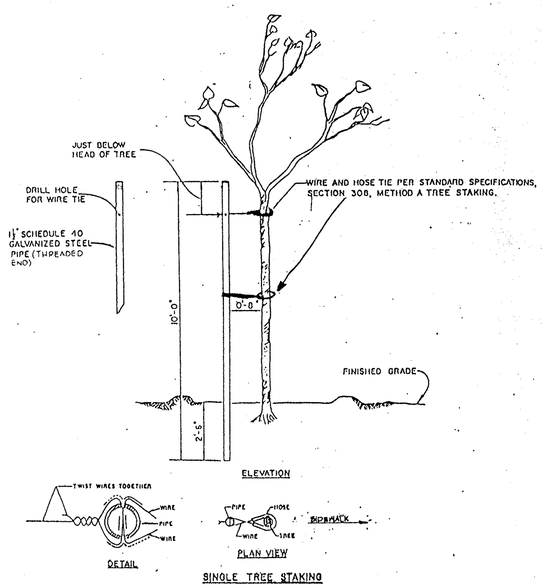

BUREAU OF ENGINEERING	DEPARTMENT OF PUBLIC WORKS	CITY OF LOS ANGELES
TREE STAKING AND GUYING DETAILS		STANDARD PLAN S-663-0

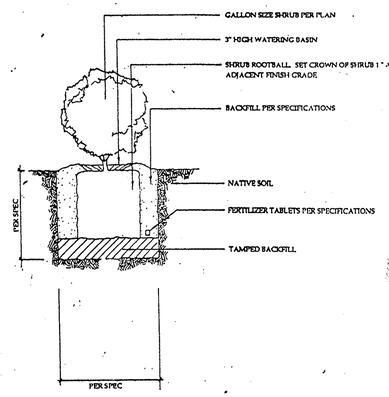

SHRUB PLANTING

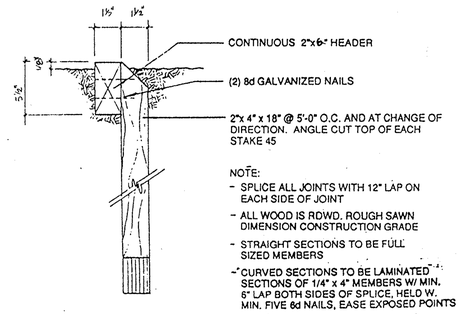

NOTE:
- SPLICE ALL JOINTS WITH 12" LAP ON EACH SIDE OF JOINT
- ALL WOOD IS RDWD. ROUGH SAWN DIMENSION CONSTRUCTION GRADE
- STRAIGHT SECTIONS TO BE FULL SIZED MEMBERS
- "CURVED SECTIONS TO BE LAMINATED" SECTIONS OF 1/4" x 4" MEMBERS W/ MIN. 6" LAP BOTH SIDES OF SPLICE, HELD W. MIN. FIVE 8d NAILS, EASE EXPOSED POINTS

REDWOOD HEADER.

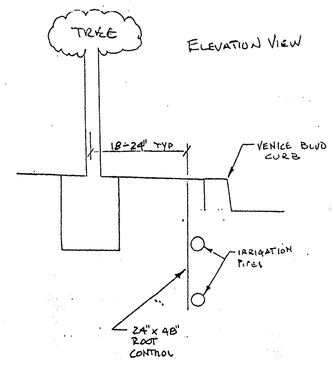

PARALLEL ROOT CONTROL BARRIER - SECTION

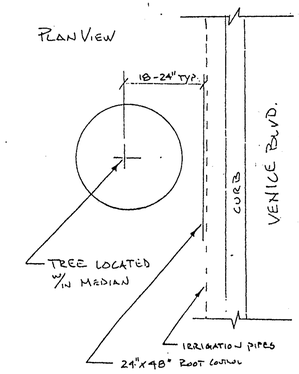

PARALLEL ROOT CONTROL BARRIER - PLAN

CITY OF LOS ANGELES
DEPARTMENT OF PUBLIC WORKS
BUREAU OF ENGINEERING
ROBERT S. HORII CITY ENGINEER
ARCHITECTURAL DIVISION
CITY HALL EAST ROOM 850 PHONE 485-5825

BUREAU OF ENGINEERING
CITY OF LOS ANGELES
CIVIL ENGINEERING RECORDS

CITY ENGINEER
DEPUTY CITY ENGINEER
PRINCIPAL ARCHITECT
ARCHITECT
STRUCTURAL ENG.
BLDG MECH ENG.
BLDG ELEC ENG.

City of Los Angeles
VENICE BOULEVARD PLANTING PLAN
VOL. 1 OF 1 AS CONSTRUCTED WITH CP PROJ. 80-10097
Planting Details

BLDG NO
WORK ORDER NO
PLAN NO
DATE
JOB CAPTAIN
DRAWN BY
CHECKED BY
SHEET NO 13
L-10
OF 13 SHTS

INDEX NUMBER D-30879
SHEET 13 OF 13 SHEETS
BLDG. NO. D-30879

D-30879